REV	DESCRIPTION	DATE

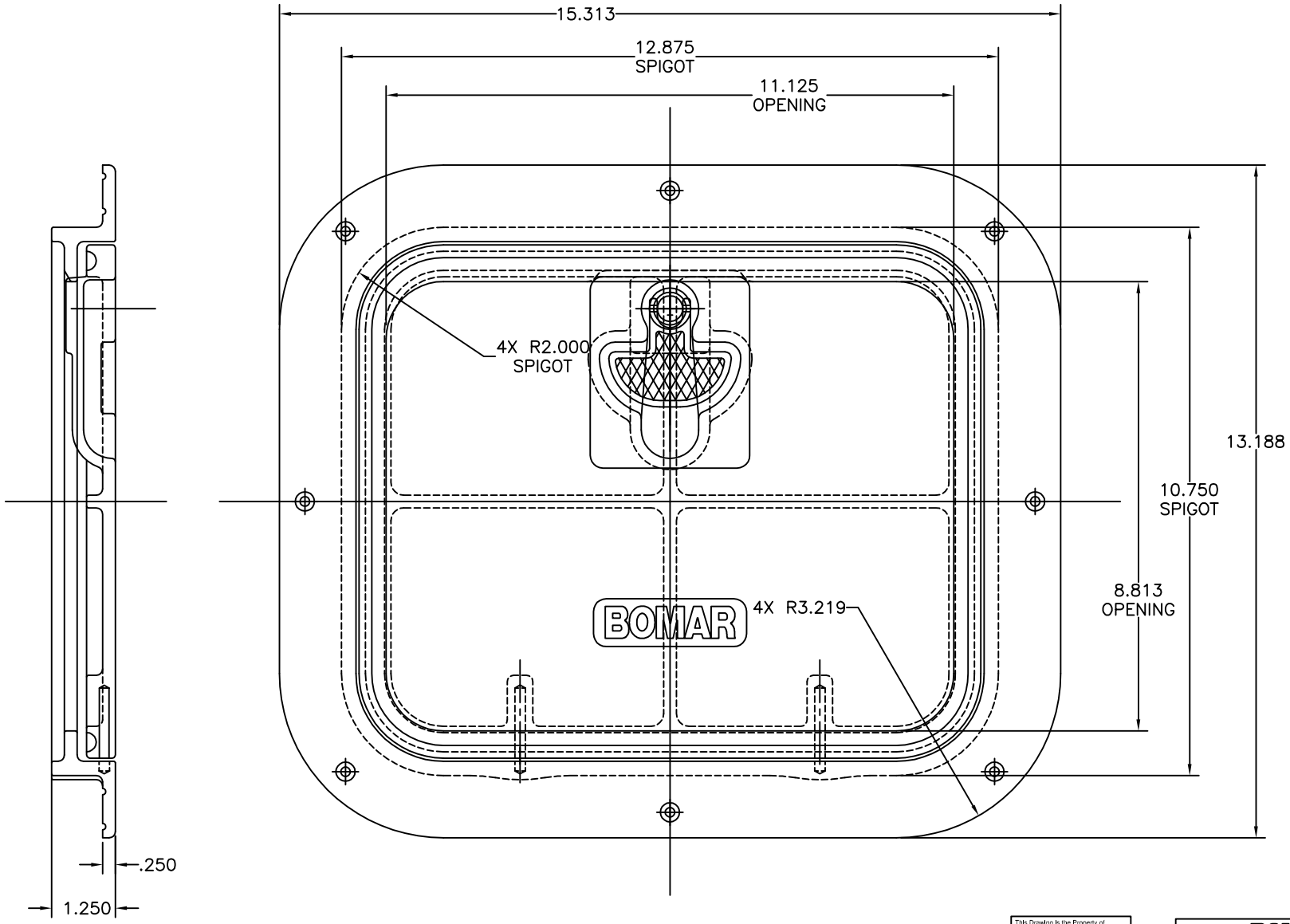

This Drawing Is the Property of Pompanette, LLC. Charlestown, N.H. All Rights Reserved. This Drawing and Information May Not Be Copied or Disclosed to Others Without Written Permission of Pompanette, LLC.

8-X-12CAST-BASE C4812.DWG

MADE IN U.S.A. BY BOMAR

DIV. OF POMPANETTE INC.
S.R. ST. PO BOX 11
CHARLESTOWN, N.H. 03603
PH. (603) 826 5791
FAX (603) 826 3074

FRACT. ±1/32	TITLE 8 X 12 DECK PLATE GENERAL ASSEMBLY		
DEC. .XXX ±.005 .XX±.02	MATL. ALMAG-35	DRAWN BY RRR	1 of 1
ANGL. ±0.5	SCALE FULL / SIZE D / DATE 8/18/97	PART NO. C4812	